Measurement and evaluation of receiver protection circuitry for front-door protection

T. Nilsson, R. Jonsson

Swedish Defence Research Agency, Box 1165,
SE-581 11 LINKÖPING, Sweden

tonnil@foi.se, roljon@foi.se

Abstract

This paper presents measurement results on both commercially available and in house developed limiter circuits. Several types of commercial limiters have been tested, including PIN and Schottky -diode limiters, gas discharge tube based limiters. The limiter developed at FOI is based on a GaAs MMIC process in order to minimize size and enable smooth integration with the receiver circuitry. Both Schottky diodes and enhancement mode FETs has been tested as limiting elements in the MMIC limiter.

Introduction

Recently the threat from high power microwave (HPM) weapons has gained importance. Both civilian and military electronic equipment are vulnerable to such a threat. A typical component that needs to be protected is a MMIC front-end receiver. Depending on the level of threat and the damage level of the receiver different types of protection circuits can be used to limit the power delivered to the sensitive circuitry. The growing use of array antennas has also increased the demands on miniaturization of the protection devices.

Design and simulations

Several GaAs MMIC limiters have been designed at FOI. The layout was done using the software tool Libra from HP-EESOF. The ED02AH process, provided by the OMMIC foundry, has been used for the design. The designs are based on different diode and filter constellations. Both Schottky diodes and enhancement mode FETs [1] are used. This type of limiter is highly preferable, due to its small size and ability to be integrated with receiver circuitry.

The commercial limiters

The commercial limiters tested are not intended exclusively for HPM protection some are for NEMP, EMP or ESD protection. The technologies for these limiters are mainly gas discharge tubes or diode based. The work consists of evaluating these limiters, to see which ones also can be suitable for HPM protection. The limiters have been gathered from several different component vendors, mainly from M/A-Com, Huber&Suhner and Littlefuse.

Measurements

The measurement setup used to characterize the pulsed and CW large signal properties of the limiters is shown in fig. 1. The setup allows measurements of input power, reflected power and transmitted power over the frequency range 0.5-18 GHz in both CW and pulsed mode with a maximum output power of ~33dBm. With additional amplifiers/TWTs the output power can reach ~53 dBm for frequencies between 1 and 4 GHz. The output power level from the amplifiers is stepwise increased until the component starts to limit or the maximum output power level is reached. To characterize the limiters in terms of small signal parameters a HP 8510C network analyzer is used. With the network analyzer insertion loss and input and output return losses are measured.

Fig. 1. The measurement setup.

Huber-Suhner GDT Limiter 3401.17.0023

This limiter, shown in fig. 3, is based on gas discharge tubes. It's optimum frequency range is 25 to 2500 MHz and it is matched for a 50 ohm impedance system. The CW power durability of the component is 150 Watt. The measurement was performed at a frequency of 2 GHz. The injected power has been step by step increased until it reached the maximum level of 33 dBm. However the limiter shows no signs of limiting the input power.

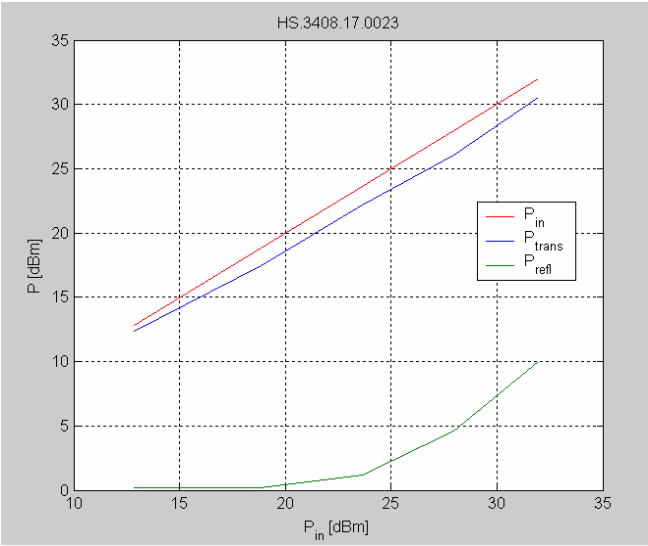

Fig. 2. Input power, output power and reflected power of the Huber-Suhner GDT Limiter 04 limiter

Fig. 3 Huber-Suhner GDT Limiter.

Microsemi GG-77314-04, 13 dBm limiter

The microsemi limiter is based on diodes. The frequency band for this component is 2 to 8 GHz . The maximum CW power for the component is 30 dBm. The measurements was done at a frequency of 6 GHz. The injected power starts at –15 dBm and is step by step increased to 33 dBm. Figure 5 shows clearly how the transmitted power is limited to ~ 5 dBm.

Fig. 4 Microsemi GG-77314-04 limiter

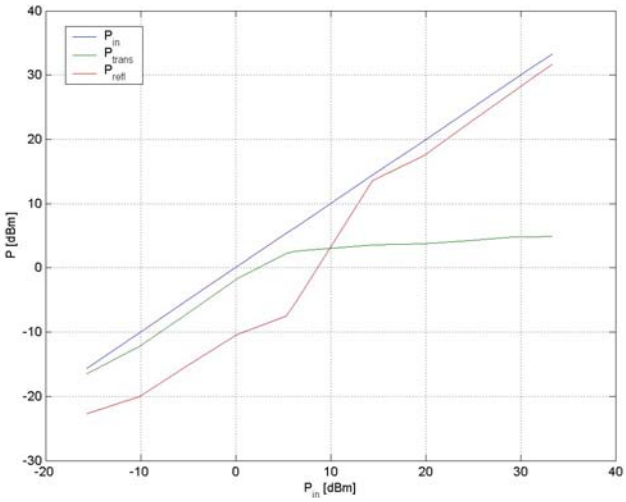

Fig. 5 Input power, output power and reflected power of the Microsemi GG-77314-04 limiter

MMIC-limiter/LNA (M/A-COM)

This component is an integrated MMIC circuit, it consists of limiters in cascade with a low noise amplifier (LNA). The frequency range is 8.5 to 12 GHz. This is a very small circuit, this type of limiter is suitable as a last stage protection. The maximum CW power handling capability for the circuit is 10 Watt. The measurement was performed at 6 GHz. The injected power begins at –17 dBm and is step by step increased to 33 dBm. As seen in the Figure 5 the limiter works well. The transmitted power is successfully limited to ~21 dBm.

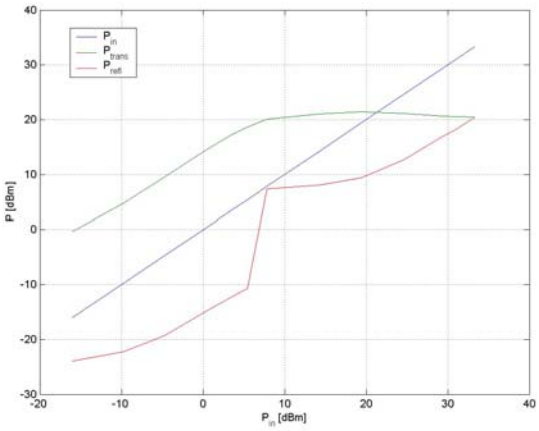

Fig. 5 Input power, output power and reflected power of the M/A-COM MA01502D limiter.

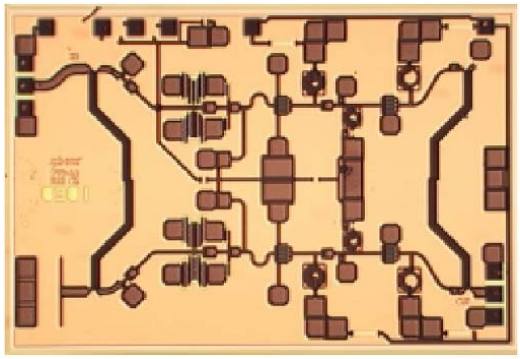

Fig. 6 The M/A-COM MA01502D limiter.

MMIC Schottky diode

This limiter is an in-house developed MMIC circuit. It is based on GM-diodes. These diodes are connected back-to-back for a good protection. The frequency operation range is at least 2 to 8 GHz. This type of limiter is easy to integrate with receiver front-end circuitry. The measurement was done at 6 GHz. The injected power starts at 6 dBm and is step by step increased to 33 dBm. Figure 8 shows how the circuit starts to limit when the input power is ~15 dbm. The transmitted power is gradually limited. Further measurements are needed to determine the destruction level of this limiter.

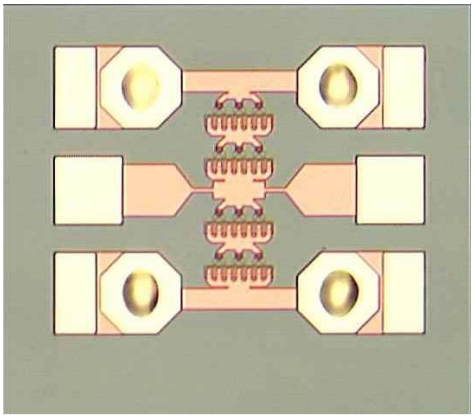

Fig. 7 The MMIC Schottky diode limiter.

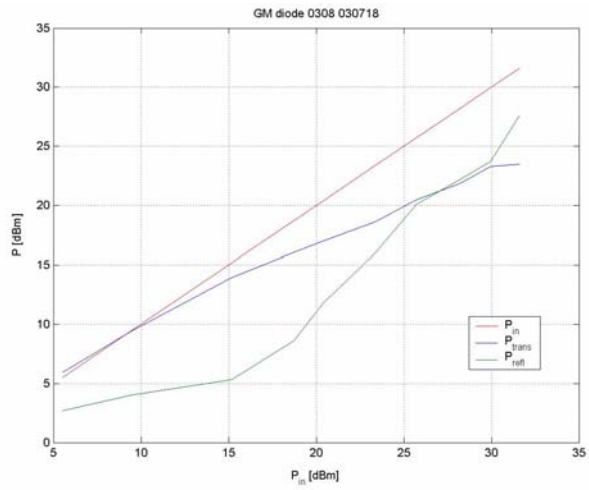

Fig. 7 Input power, output power and reflected power of the MMIC Schottky diode limiter.

Summary

Measurement results on both commercially available and in house developed limiter circuits were presented. Several types of commercial limiters have been tested.
A GaAs MMIC limiter developed at FOI was also evaluated. Evaluation of a commercial limiter suggests that MMIC based limiters can be used for protection at least up to 10W input power. The testing of lightning- and EMP–protections shows that these can only be used as a first protection against very high power levels.

References

[1] C. Trantanella, M. Pollman and M. Shifrin. *"An investigation of GaAs MMIC high power limiters for circuit protection."* 1997 MTT-S International Microwave Symposium Digest 2. (1997 Vol. II [MWSYM]): 535-538.